Design of a Heavy Medium Separator

OKPALA, ALEXANDER NWACHUKWU, PhD

DEPARTMENT OF MECHANICAL ENGINEERING,
FACULTY OF ENGINEERING, NIGER DELTA UNIVERSITY,
WILBERFORCE ISLAND, BAYELS A STATE, NIGERIA.

ABSTRACT

The design of a laboratory size heavy medium separator was carried out. This was done sequel to the need for a locally available and affordable laboratory heavy medium separator for metallurgy students in developing economies. The separator was successfully designed and proper material selection achieved. The separator has since been fabricated and put to effective use.

Key Word; separator, heavy medium, comminution, minerals, gravity, float, sink

1.0 INTRODUCTION

The design of the heavy metal separator is based on the principle mixture of comminuted materials with different specific gravity is charged into a vessel containing any suitable liquid; the material whose specific gravity is greater than that of the liquid will sink while those with specific gravity is less than that of the liquid will float. Hence it is imperative that if the vessel is rotating, due to the whirling action impacted on the mixture, minerals with higher specific gravity than the liquid would move to the walls of the containing vessel while those of lower specific gravity would segregate to the centre portion of the containing vessel and fall out through openings on the side walls and the central outlet of the containing vessel respectively.

2.0 SCOPE OF DESIGN

This design work was done using components that are readily available to ensure its workability. For instance, the maximum length that would be handled by the wood drilling machine available is 430mm; therefore the length of the separator (shaft) selected to be 430mm. the motor available for the separator has a power rating of 1Hp (0.746Kw) and a speed of 1440rpm.

The separator is specifically designed to concentrate a maximum of 5kg of minerals with specific gravity less than or equal to that of iron ore (5.2 - 5.3).

3.0 DETERMINATION OF THE LOAD TO BE CARRIED BY SHAFT

For a mineral with specific gravity (S.G.) of 5.3, its density = 5.3 x 1000kg/m^3

From Volume $= \frac{\text{mass}}{\text{density}}$

5kg of the mineral will occupy a volume of

$\frac{5\text{kg}}{5300} = 0.000943\text{m}^{3.}$

But it is given that for effective separation, the volumetric ratio of water to ore should be about 3:1 [Kelly and Spottiswood (1982)].

Therefore for 5kg of ore occupying a volume of 0.000943m^{3,} the water occupies a volume of 0.000943 x 3 = 0.00283m^3

Since the density of water = 1000kg/m^3

From mass = volume x Density,

Mass of water required to separate 5kg of ore

= 0.00283 x 1000 = 2.83kg

Mass of slurry = mass of ore + mass of water

= 5kg + 2.83kg

= 7.83 ≈ 8.0kg (to allow for over loading)

This mass is to be distributed over a length of 430mm; therefore this gives a uniformly distributed load of

$$\frac{8.0}{0.43}\text{Kg/m} = 18.6\text{Kg/m} = 186\text{N/m}$$

For the purpose of power transmission to the shaft that would carry the separator, a pulley weighing 1.773kg with a sheave diameter of 160mm was selected for trial design.

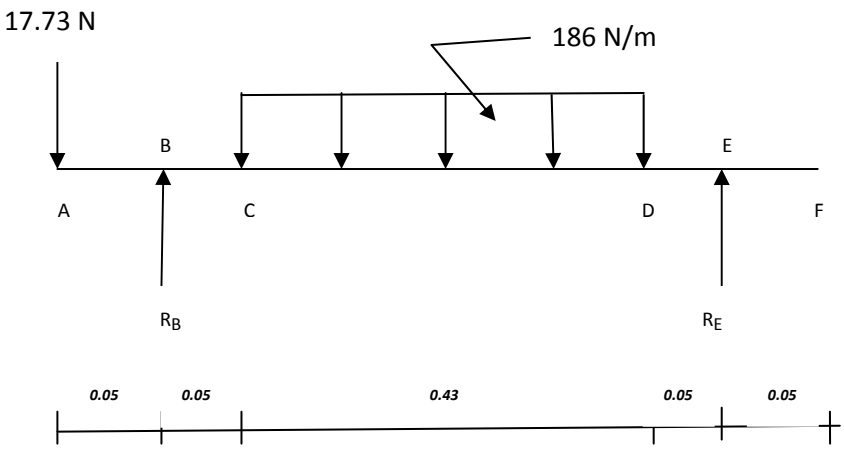

Figure 1: Free Body Diagram of the conceptual arrangement of the component parts

3.1 Determination of the Support (Bearing) Reactions

$\circlearrowleft + \sum M_B = 0$

17.73 (0.05) – 79.98 (0.265) + R_E (0.53) = 0 and R_E = 38.32N

$\uparrow + \sum F = 0$

- 17.73 + R_B – 79.98 + R_E = 0

R_B = 79.98 + 17.73 – 38.32 = 59.39N

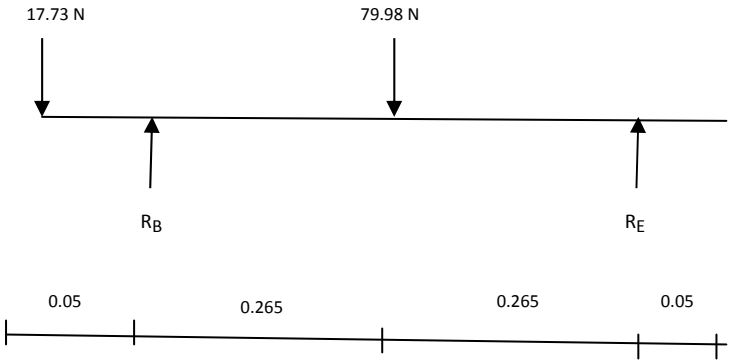

Figure 2: Support (Bearing) Reactions

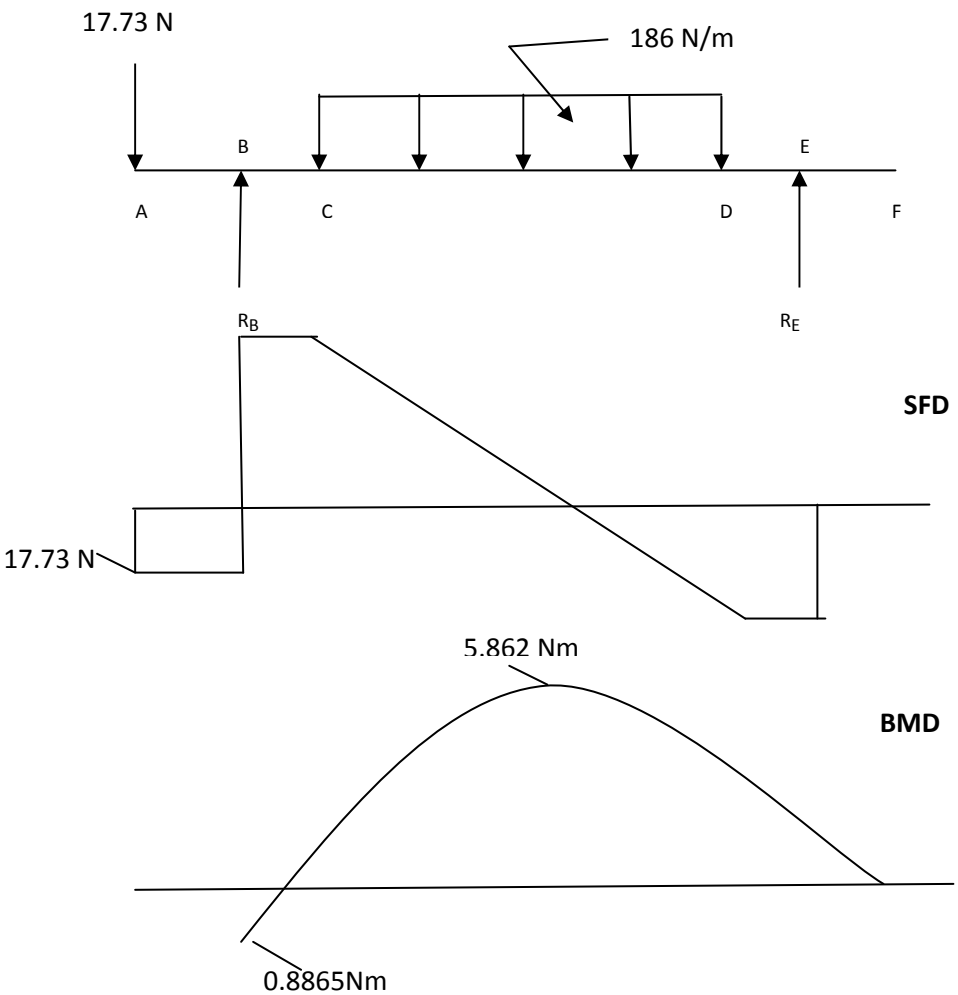

Figure 3: Shear Force and Bending Moment Diagrams

3.2 Determination of the maximum Bending Moment

From the SPD it is seen that the point of zero shear force (i.e. point of maximum bending moment) falls in the region between C and D. Equating the shear force equation for this region to zero, we obtain;

$$F_x = -17.73 + 59.39 - 186\,(X-0.1) = 0$$

$$X = \frac{41.66+18.6}{186} = 0.324\text{m from A}$$

Substituting this value of X into the bending moment equation for this region (between C and D),

$$M_{max} = -17.73\,(0.324) + 59.39(0.324 - 0.05) - 186\frac{(0.324-0.1)^2}{2}$$

M_{max} = 5.862 Nm.

4.0 DESIGN OF SHAFT

Since the motor available has a power rating of 1Hp (0.746kw) speed of 1440rpm and a driving sheave (pulley) diameter of 80mm. the speed of the shaft could be calculated since the sheave diameter of the driven (pulley) to be attached to the shaft is known to be 160mm from the relation

$$n_1D_1 = n_2D_2$$

Where n_1 and n_2 are the motor and the shaft speeds respectively

D_1 and D_2 are the motor and pulley attached to the shaft, sheave diameter respectively.

$$\text{Shaft Speed } n_2 = \frac{1440 \text{ x } 80 \text{ rpm}}{160} = 720 \text{ rpm}$$

Also, since a factor of 0.1 is allowed for losses in power for transmission from motor to shaft [Cherkassky (1977)], the power rating of the shaft in kw

$$= 0.746 - 0.746 \text{ x } 0.1$$

$$=0.6714\text{kw}$$

The torsional moment acting on the shaft

$$M_t = \frac{9550 \text{ xP (kw)}}{\text{V(rpm)}} \qquad \text{[Hall et al(1980)]}$$

Where P = shaft power rating in kw

V = shaft speed in rpm

$$M_t = \frac{9550 \text{ x}0.6714 \text{ (kw)}}{720\text{(rpm)}} = 8.905$$

The shaft diameter (hollow) is derived from the formula

$$d^3 = \frac{16\sqrt{(M_bK_b)^2+(M_tK_t)^2}}{\pi S_s(1-K^4)} \qquad \text{[Hall et al(1980)]}$$

Where S_s = Maximum shear stress (allowable)
M_b = M_{max} = bending moment in Nm
M_t = Torsional moment in Nm
K = d_i/d_o
K_b = *Combined* shock and fatigue factor applied to bending moment.

	K_t	=	combined shock and fatigue factor applied to torsional moment
But,	M_b	=	5.862 NM
	M_t	=	8.905NM
	K	=	0.6 (chosen from table)
	K_b	=	2.0 (chosen from table)
	K_t	=	2.55(chosen from table)
	S_s	=	1.65 x 10^6N/m^2 for shaft material [Iroko type of hardwood: Tyler(1980)]

Therefore,

$$d^3 = \frac{16\sqrt{5.862 \text{ x } 2)^2+(8.905 \text{ x } 2.55)^2}}{3.142 \text{ x } 1.65 \text{ x } 10^6(1-0.6^4)}$$

d^3 = 9.0626 x $10^{-5}m^3$ and Shaft diameter d, = 0.0449m ≈ 45mm.

4.1 Determination of the diameter of the Cylindrical Separator attached to the shaft

Taking a fillet radius r, of 3mm and a stress concentration factor due to bending, K= 2. The ratio $\frac{r}{d} = \frac{3}{45} = 0.067$

From stress concentration factor graph [Spotts (1988)], these two values gives a corresponding D/d ratio =2.

Where D = diameter of cylindrical separator

D = diameter of shaft

D = 2d = 2 x 45mm = 90mm.

4.2 Determination of the Critical speed of shaft

The fundamental critical speed for a shaft on two supports is as follows:

$$f = \frac{1}{2\pi}\sqrt{\frac{g(W_1Y_1+W_2Y_2+W_3Y_3+\cdots)}{W_1Y_1^2+W_2Y_2^2+W_3Y_3^2+\cdots}} \text{cycles/sec}$$

Where W_1, W_2, etc the weights of the rotating body

Y_1, Y_2 etc represents the static deflection of the weight

g=gravitational constant = 386m/sec [Spotts (1988)]

4.3 Determination of Static Deflections Due to Weights

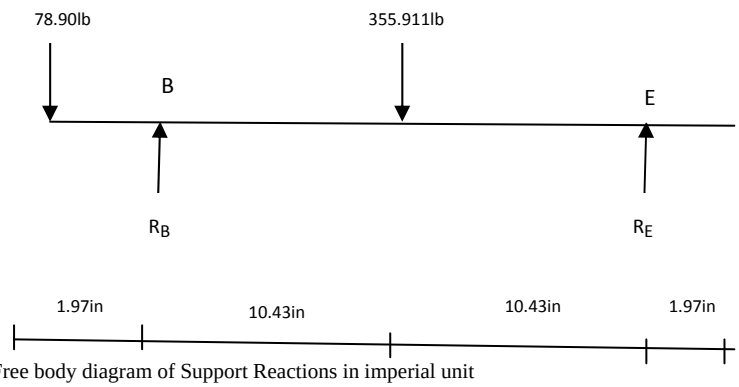

Figure 4: Free body diagram of Support Reactions in imperial unit

$$Y = \frac{Pax}{6LEI}(l^2\text{-}b^2 - x^2)$$

$I = \frac{\pi d^4}{64} = \frac{\pi(1.752)^4}{64} = 0.4625 in^4.$

The modulus of elasticity E, for iroko type of wood

E=10300 N/mm^2 =70,967,000psi [Tyler (1980)]

At B due to 355.911lb

$Y = \frac{78.90 \text{ x}1.97 \text{ x}22.83}{6 \text{ x } 24.8 \text{ x } 70967000 \text{ x } 0.4625}(24.8^2\text{-}22.83^2) = 6.53552 \text{ x } 10^{-5}$

Total deflection at A = 6.53552 x 10^{-5} + 7.52 x 10^{-4} = 8.1758 x 10^{-4} in

At E due to 78.90lb

$Y = \frac{78.90 \text{ x } 10.43 \text{ x } 1.97}{6 \text{ x } 24.8 \text{ x } 70967000 \text{ x } 0.4625}(24.8^2\text{-}10.43^2 - 1.97^2) = 1.668 \text{ x } 10^{-4}\text{in}$

At E due to 355.911lb

$Y = \frac{355.911 \text{ x } 10.43 \text{ x } 10.43}{6 \text{ x } 24.8 \text{ x } 70967000 \text{ x } 0.4625}(24.8^2\text{-}10.43^2 - 10.43^2) = 3.151 \text{ x } 10^{-3}\text{in}$

$f = \frac{1}{2\pi}\sqrt{\frac{386(78.90 \text{ x } 8.175 \text{ x } 10^{-4} + 355.911 \text{ x } 3.32 \text{ x } 10^{-3})}{78.90 \text{ x}(8.175 \text{ x } 10^{-4})^2 + 355.911 \text{ x } (3.32 \text{ x } 10^{-3})^2}}\text{cycles/sec.}$

$f = \frac{1}{2\pi}\sqrt{\frac{481.000707}{3.975 \text{ x } 10^{-3}}} = 55.359 \text{ cycles/sec}$

Therefore critical speed of the shaft is

n_{cr} = 55.359 x 60 = 3322rpm

Since the shaft is to operate at 720rpm as earlier calculated, this speed is well below the critical speed; therefore vibration problem resulting from shaft rotation is not anticipated.

5.0 BELT DESIGN

Power rating of motor = 1Hp

Speed of motor n = 1440rpm

Based on a driving sheave of diameter 80mm (3.15in) and a belt speed v, of

$v = \frac{\pi dn}{12} = \frac{\pi(3.15)(1440)}{12} = 1187.5\text{ft/min},$

the rated horse power per belt of 1.31 is interpolated from table of Hp rating of standard V belt contained in Shingley (1989).

The contact angle for the small sheave (pulley)

$\theta = \pi - 2\sin^{-1}\left(\frac{D-d}{2c}\right).$

Where D = diameter of large pulley = 160mm

d = diameter of smaller pulley = 80mm

c = centre distance = 270mm

Therefore, $\theta = \pi - 2\sin^{-1}\left(\frac{160-80}{2 \text{ x } 270}\right) = 2.884 \text{ rad} = 163^0$

Pitch or effective length of the V belt is

$L_p = 2c + 1.57(D + d) + \frac{(D-d)^2}{4c}$ [Shingley (1989)]

$L_p = 2 \text{ x } 270 + 1.57(160 + 80) + \frac{(160-80)^2}{4 \text{ x } 270} = 922.73\text{mm} = 36.63\text{in.}$

Since the belt is A section type, a factor of 1.3 as in table is added to give

Lp = 36.33 + 1.3 = 37.63in.

From standard pitch length table, the closest to this length is 38in. therefore A 38 belt is selected.

From table, a belt of length 38in has a belt length correction factor of 0.90.

From graph, the contact angle corrected horse power per belt is

H = 0.95 x 0.90 x1.31 = 1.12Hp and so, the number of belt required is

$N = \frac{1}{1.12} = 0.89 \approx 1$. One A38 belt will therefore be required.

A V-belt was selected because it has an improved grip and a better traction than ordinary flat belts. In addition V-belts require lighter tension and exert smaller pressure on the shaft and bearing.

6.0 DETERMINATION OF BEARING LIFE

For the bearings in positions B and E in figure 2, the bore of 45mm was selected as this corresponds to the calculated shaft diameters. Due to the nature of the loading expected, the single row, light series ball bearings were selected.

The life of a ball bearing is given by

$L = \left(\frac{C}{P}\right)^3 \text{ x} \frac{10^6}{60 \text{ x n}}$ hours, [Redford(1981)]

Where C = Basic load rating

n = Shaft speed (rpm)

P = Radial load on bearing

For bearing on position B [fig], the radial load, P_B = 59.39N and the shaft speed n=720rpm. C = 24KN for a bearing of 45mm bore [Redford(1981)]

Therefore life of bearing in position B,

$L_B = \left(\frac{24 \text{ x } 10^3}{59.39}\right)^3 \text{ x} \frac{10^6}{60 \text{ x } 720} = 1.528 \text{ x } 10^9\text{hours.}$

For bearing on position E [figure 2], the radial load, P_B = 38.32N and the shaft speed n=720rpm. C = 24KN for a bearing of 45mm bore [Redford (1981)]

Therefore life of bearing in position E,

$L_B = \left(\frac{24 \text{ x } 10^3}{38.32}\right)^3 \text{ x} \frac{10^6}{60 \text{ x } 720} = 5.687 \text{ x } 10^9\text{hours.}$

For a bearing of 45mm bore, the outside diameter is 75mm and the width 25mm [Spotts(1988)]. Hence this is the dimension of the selected bearing. The lives of both bearings are well above that recommended for a machine that is to be continually operated. Therefore, the bearings are appropriate.

7.0 SEPARATOR HOUSING

The housing of the separator has a length of 530mm corresponding to the distance between the two bearing supports while the cross section is to have a dimension of 250mm x 250mm.

8.0 FABRICATION

The separator was fabricated with strict adherence to design and specifications. The working drawing of the separator is presented in figure. The bill of materials is also presented in figure 5.

9.0 TESTING OF THE SEPARATOR

In testing the separator, a mixture of reddish brown haematite with specific gravity of 5.3 and white calcite with specific gravity of 2.7 and comminuted to a particle size of about 1.5mm. The separating medium used is a suspension of magnetic ferrosilicon (Fe Si) in water [90% -325mesh] giving a specific gravity of about 3.5.

On charging the mixture of ores and operating the separator for five minutes, the ores separated were sorted manually by the aid of colour difference and the product showed a recovery of about 56%.

10.0 REFERENCES

[1] Cherkassky, V.M. (1977), Pumps, Fans and Compressors, Mir Publishers Moscow, PP 78-79.
[2] Hall, A.S.Jr, Holowenko, A.R. and Laughlin, H.G. (1980), Schaum's Outline Series, Theory and Problems of Machine Design, Mc Graw-Hill Book Company, New York.
[3] Kelly, E.G. and Spottiswood, D.J. (1982), Introduction to Mineral Processing, Wiley Interscience Publication, New York
[4] Redford, G.O. (1981), Mechanical Engineering Design, the Macmillan Press Ltd, Hong Kong.
[5] Shingley J.E. and Mischke, C.R. (1989), Mechanical Engineering Design, 5th Edition, Mc-graw hill Publishing Company, New York.
[6] Spotts, M.F., (1988), Design of Machine elements, 6th Edition, Prentice –Hall of India Private Ltd, New Delhi.
[7] Tyler, H.A. (1980), Science and Materials, Level III, Van Nostrand Reinhold Co. Ltd, England.

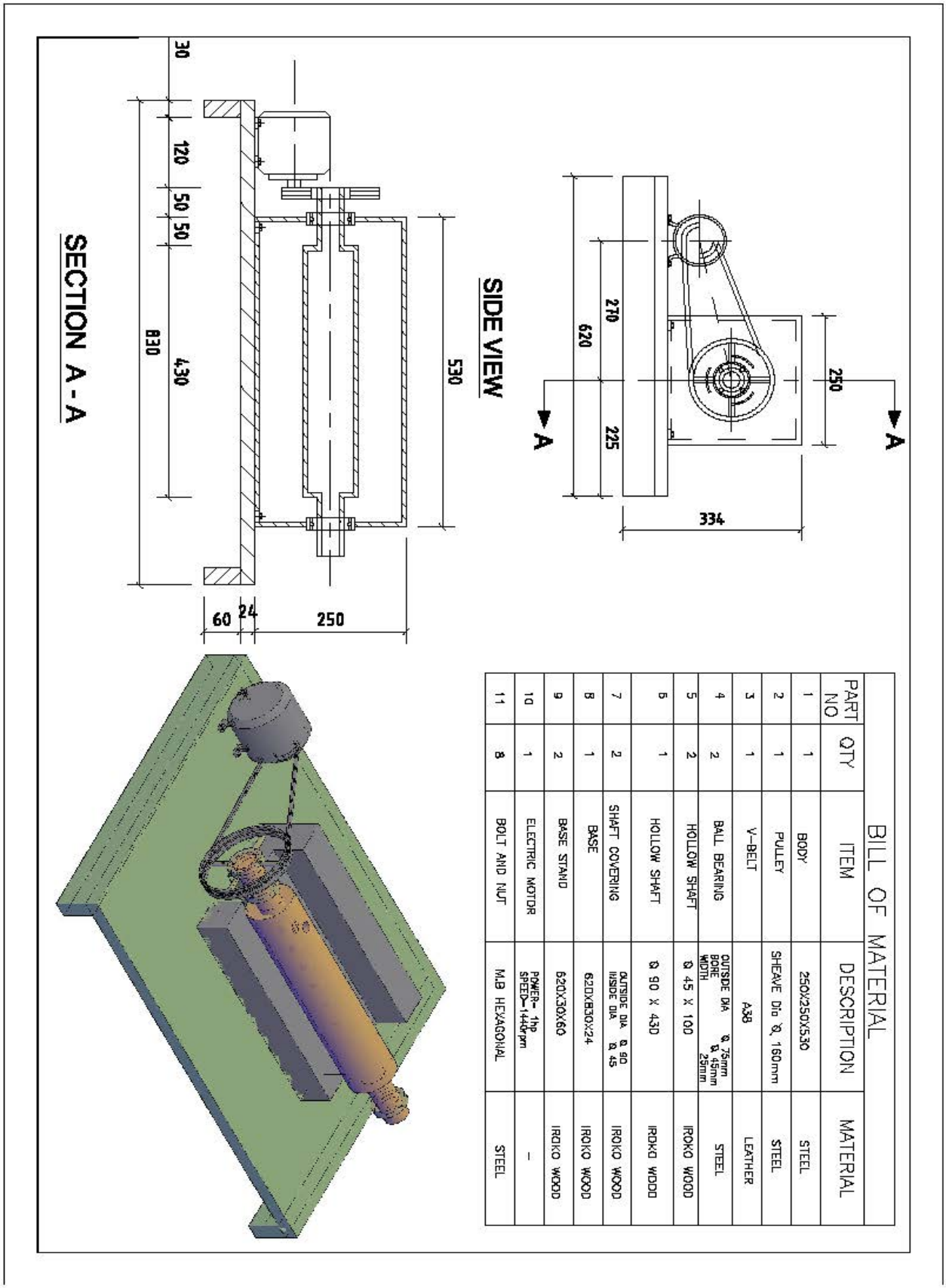

Figure 5: Sectional and pictorial view of Separator